CCO Checkouts

Linear

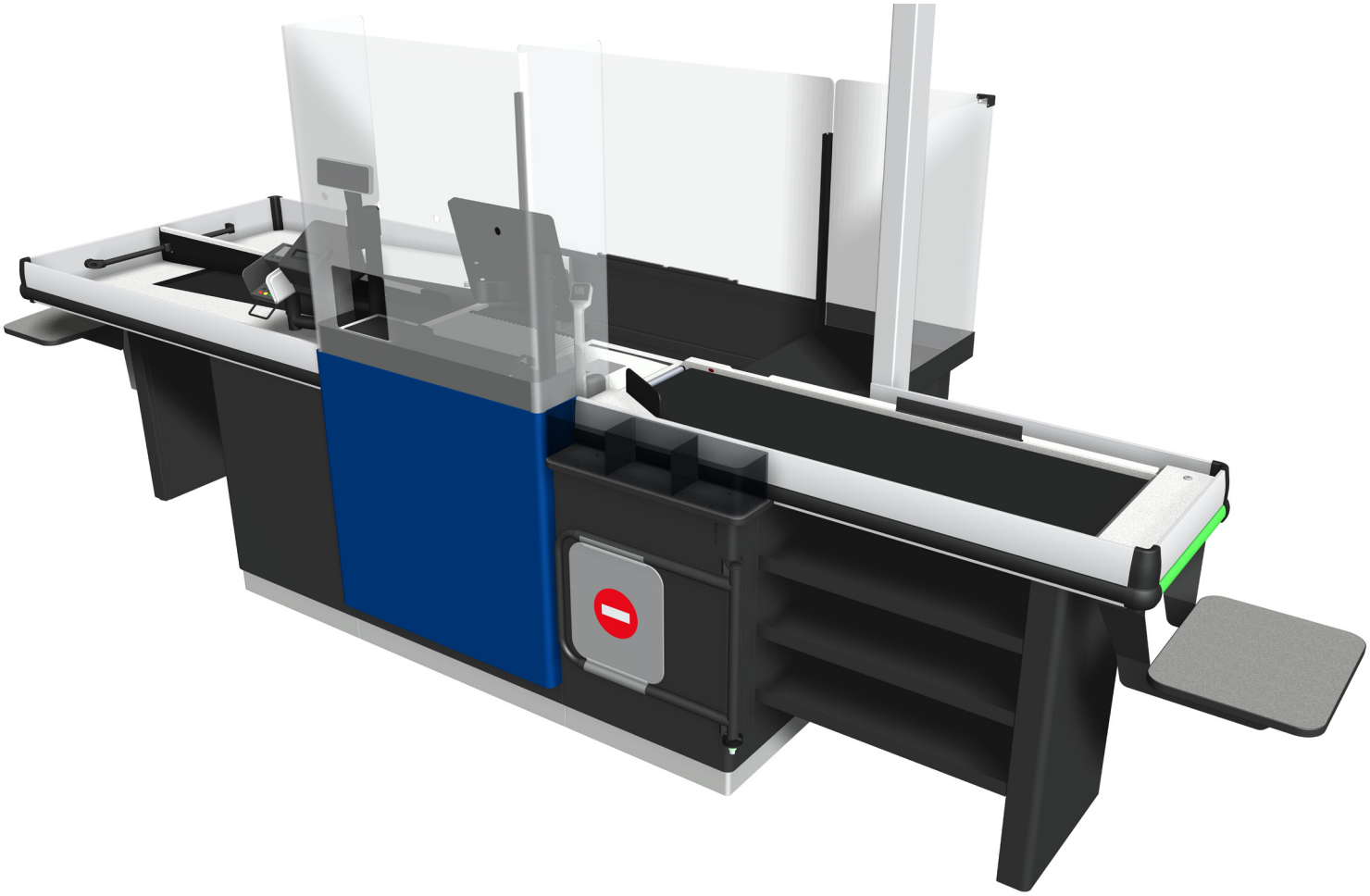

Catalogue 2026

Linear Checkouts

A smart, strong and adaptable checkout solution

Linear is a robust and versatile checkout counter designed for different types and sizes of stores. With a wide range of versions, length combinations, and accessories, it offers flexibility and efficiency for both store staff and customers.

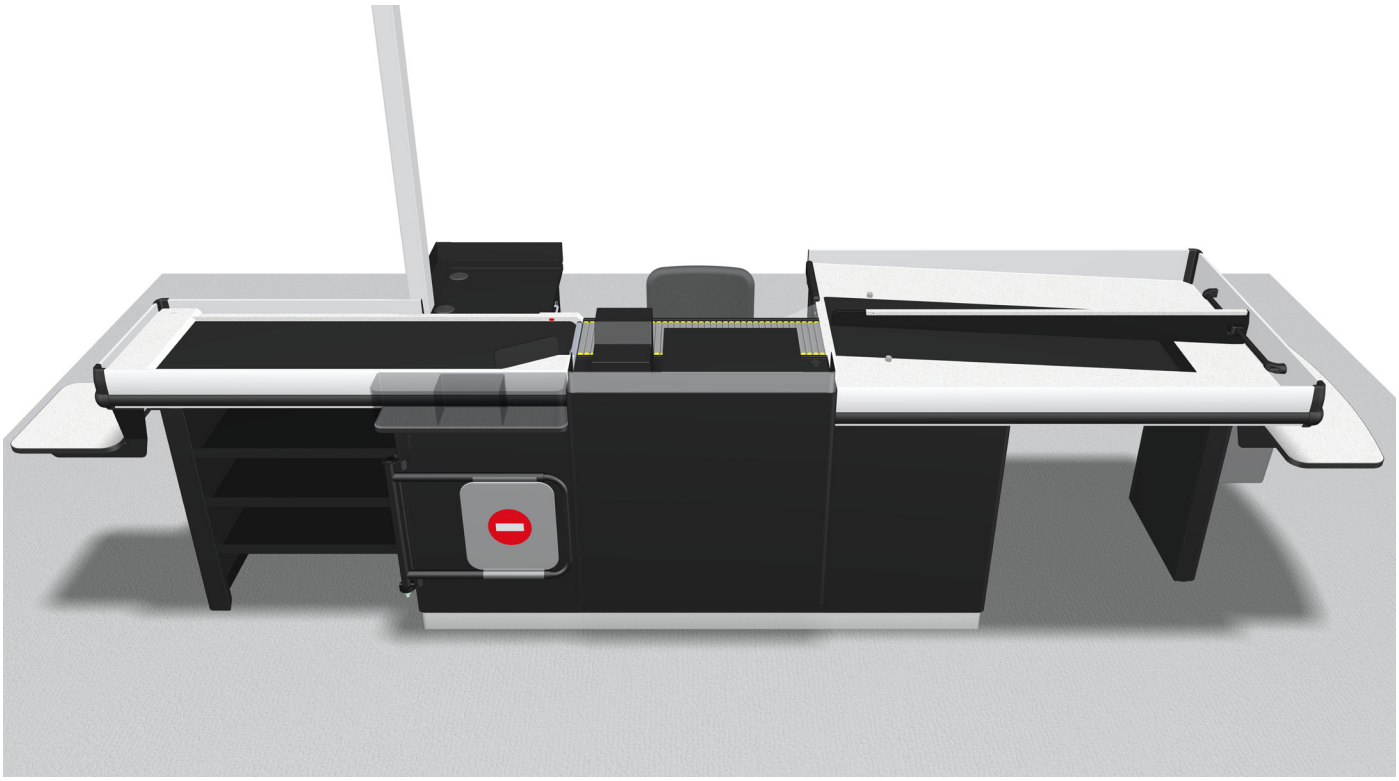

▶ A smooth and pleasant checkout experience – for everyone involved

Who is it for?

▶ Target customers
Primarily designed for grocery stores, but also suitable for other indoor stores handling packaged goods up to 100 kg – such as DIY, wholesale, and branch stores.

▶ Retail environment
Ideal for indoor environment where speed, durability and ergonomic operations are important.

Key features and benefits

- **Wide selection of models and configurations**
- **Compatible with various POS and cash management systems**
- **Ergonomic design based on Swedish recommendations (ADI566)**
- **Easy to use, clean and maintain**
- **High adjustable and plenty of options and accessories**
- **Optimized for fluent customer flow and fast installation**

Technical specification

Dimensions (H x W x W)	Length: 2 550–5 950 (2 900–6 300) mm Width: 1 200 mm Height: 905 (870–1 100) mm
Packing area alternatives	Dual lane divider, Dual lane with 3rd customer funcitionality, Triple lane with additional divider
Weight	180–350 kg
Certifications	FI
Voltage	~230 VAC, 50–60 Hz
Operating conditions	Indoor, 5–35°C
Payment option	Cash and card payment, Prepared for Cash guard, Prepared for Safepay
Scale	Digi, Stathmos, Bizerba
Scanner	Dimensions prepared for Magellan 3200 V, 3450, 9300, 9800
Standards	EN ISO 12100, EN 60204-1, EN 61000
Options	Yes

Linear **Standard**

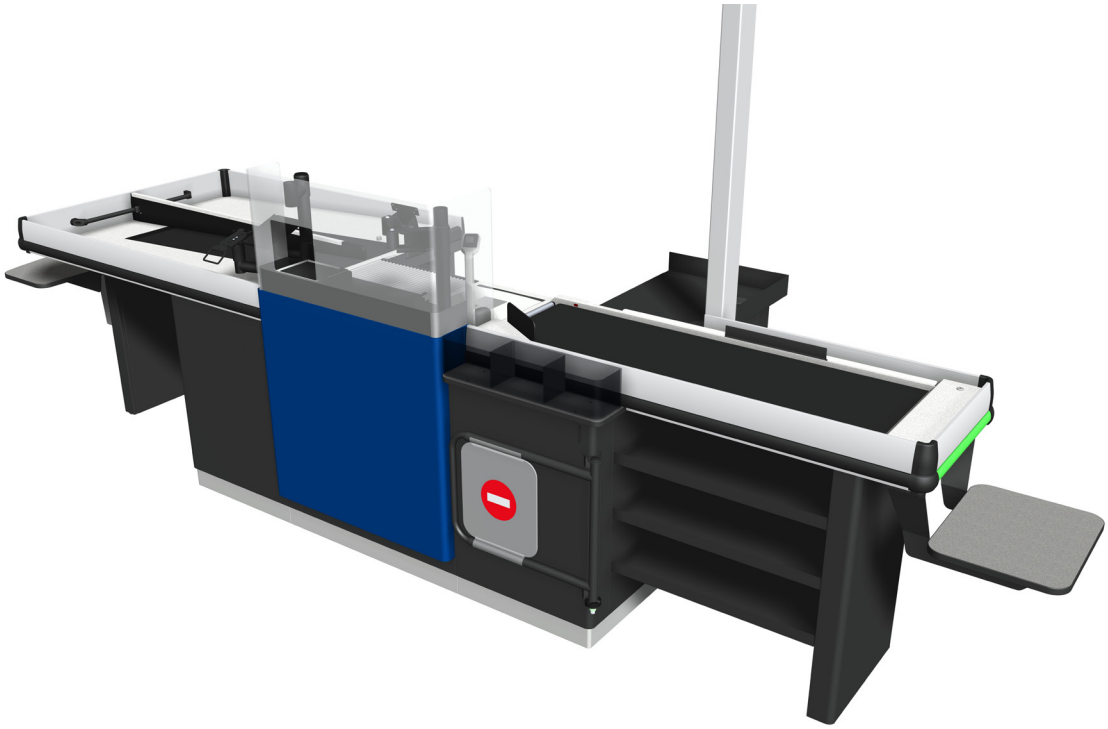

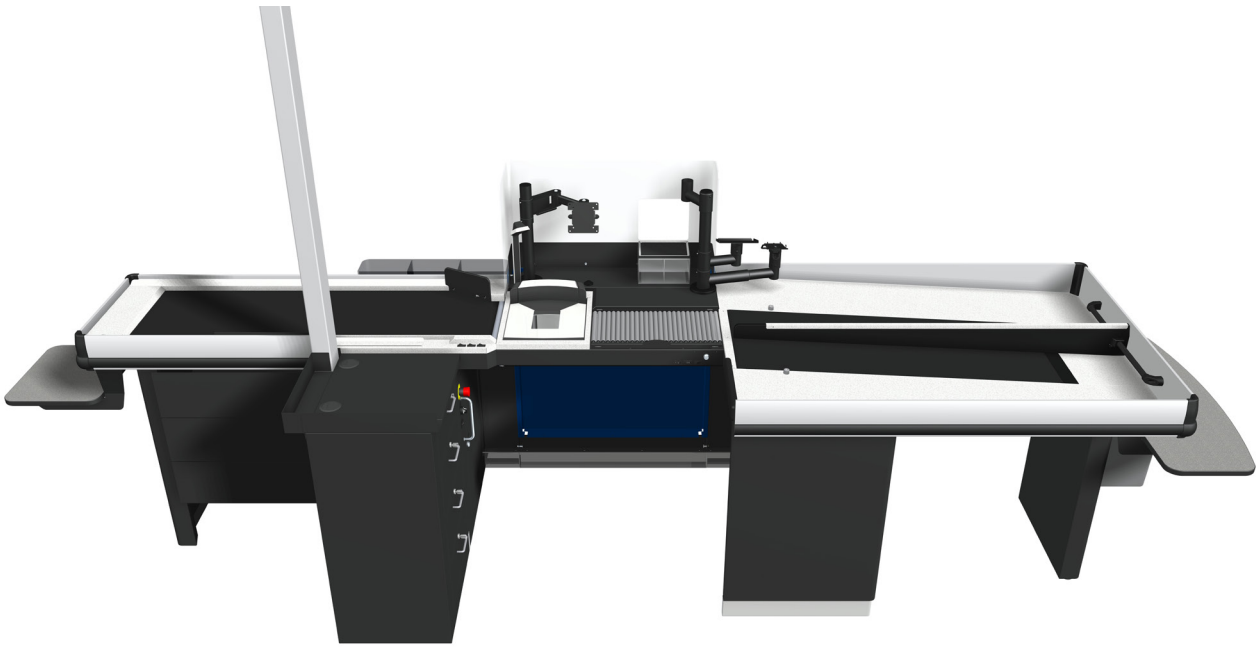

Linear **Kiosk**

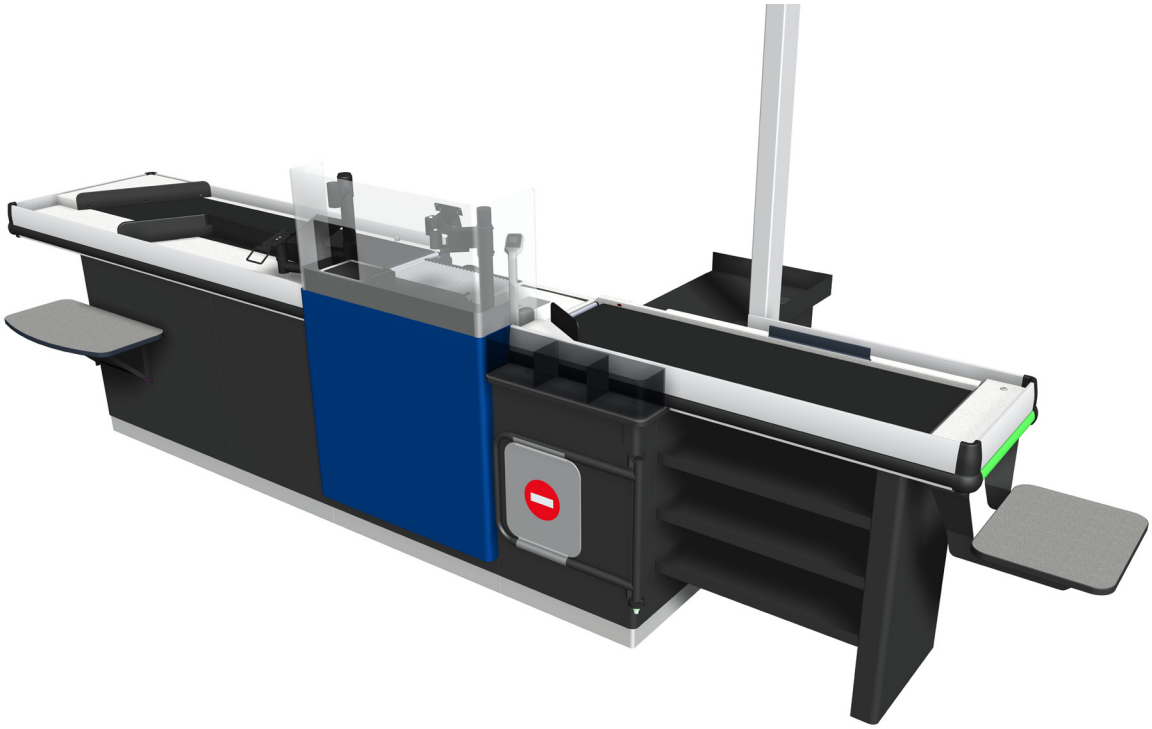

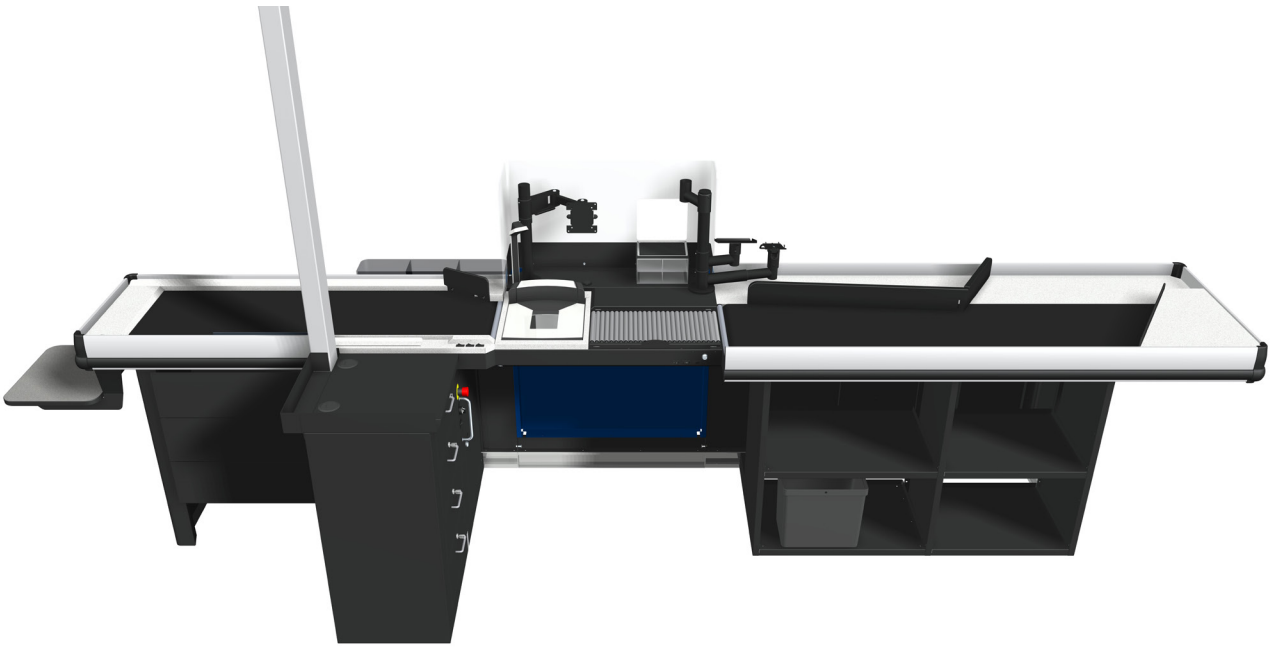

Linear **Kiosk without belt**

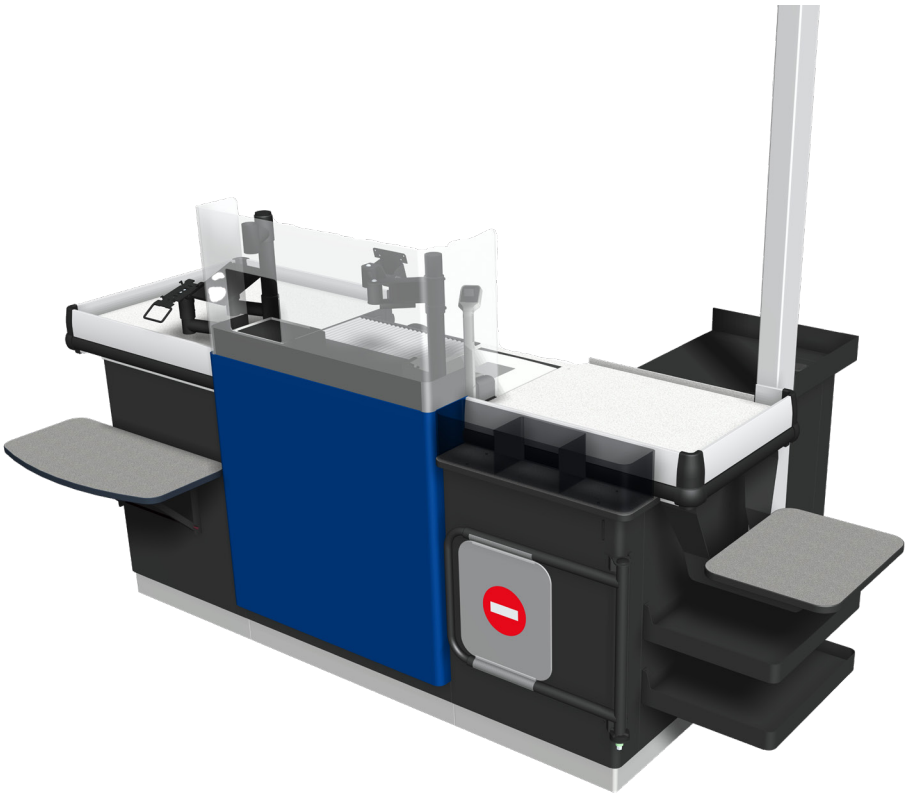

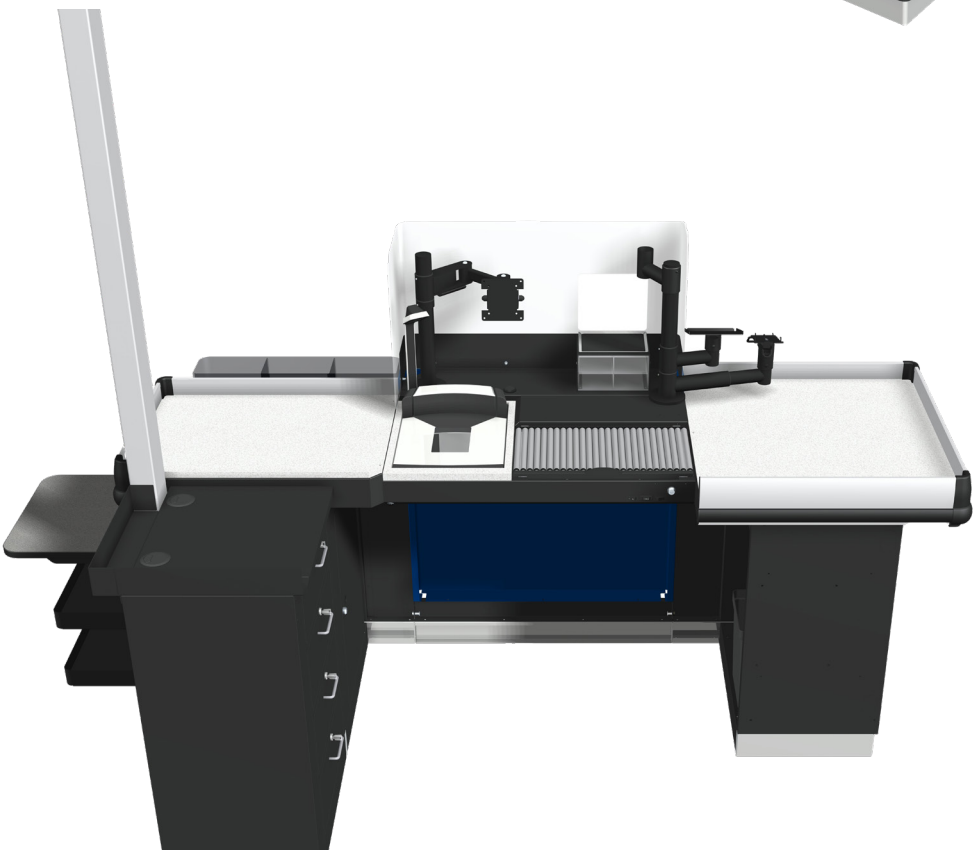

Linear T

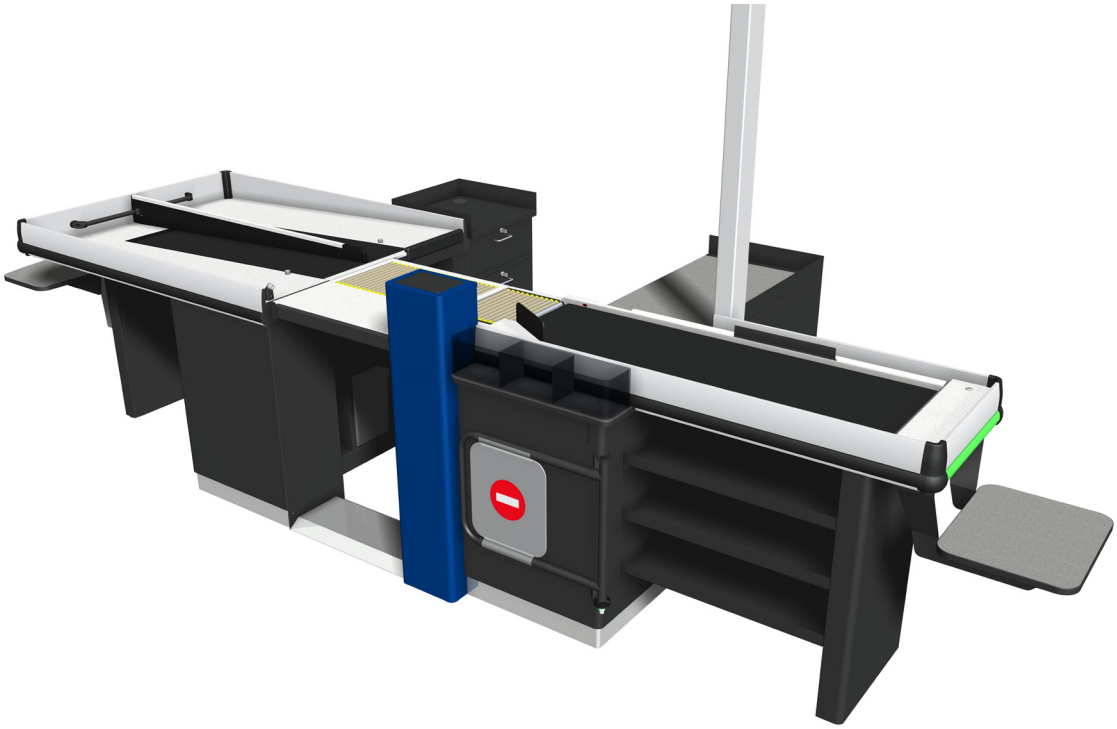

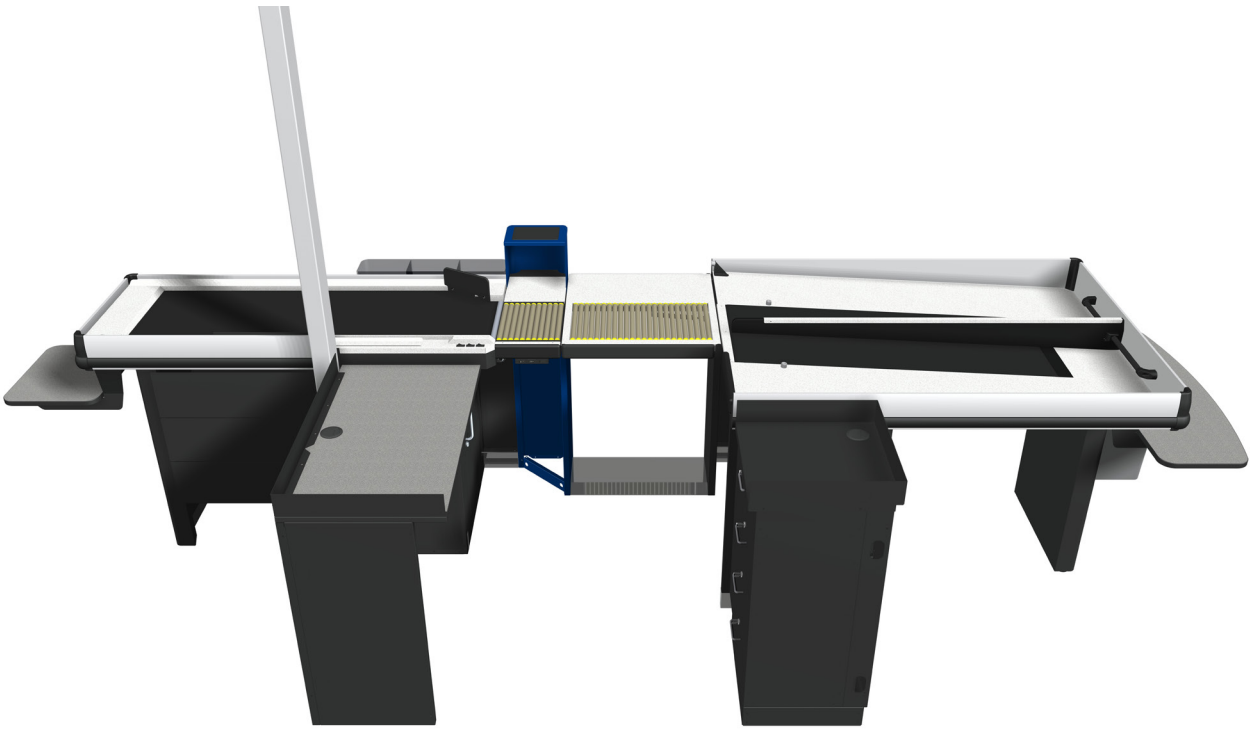

Linear **with cash guard**

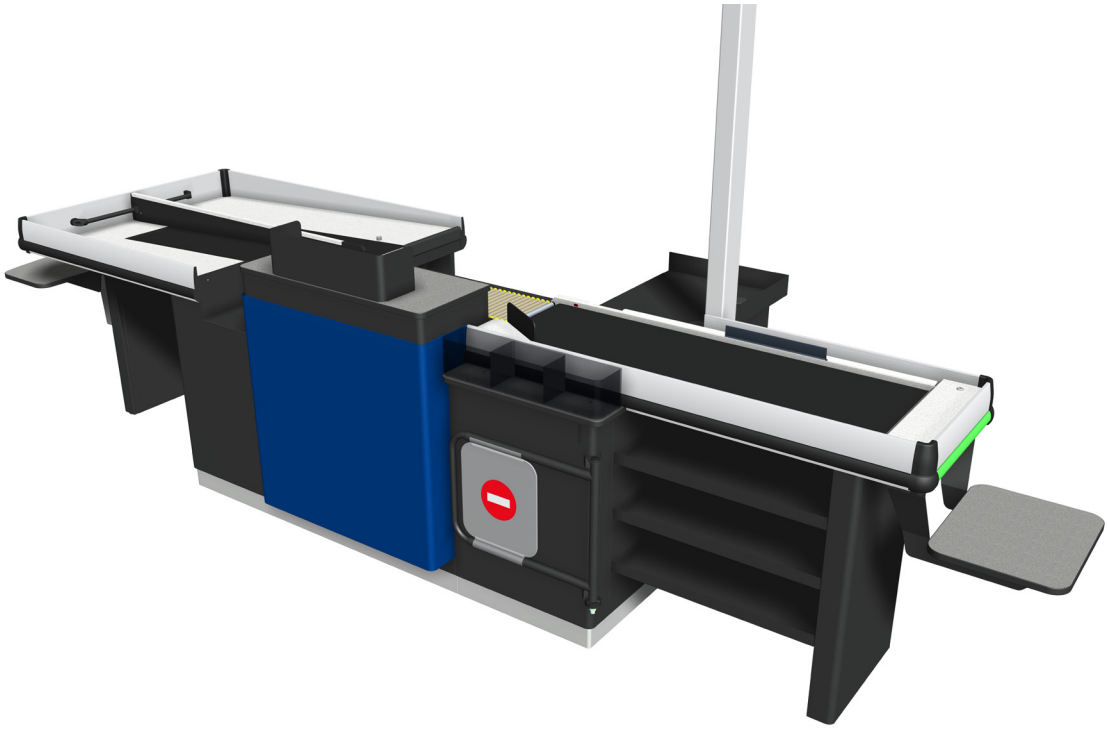

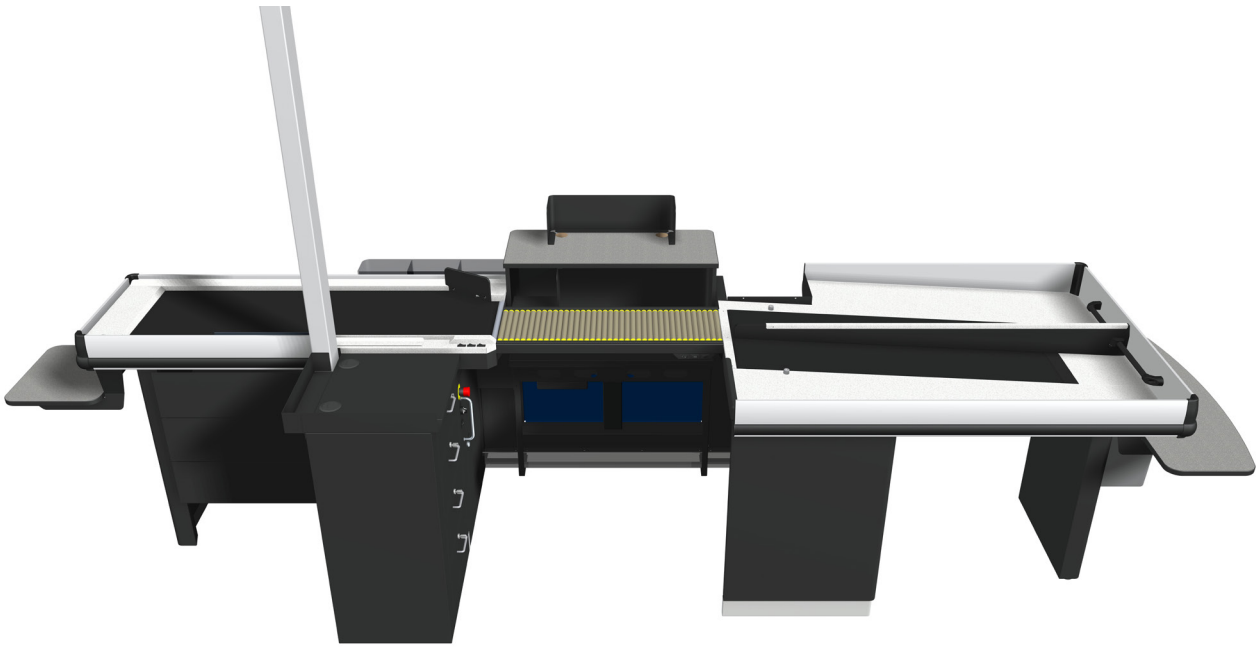

Linear **with safe pay**

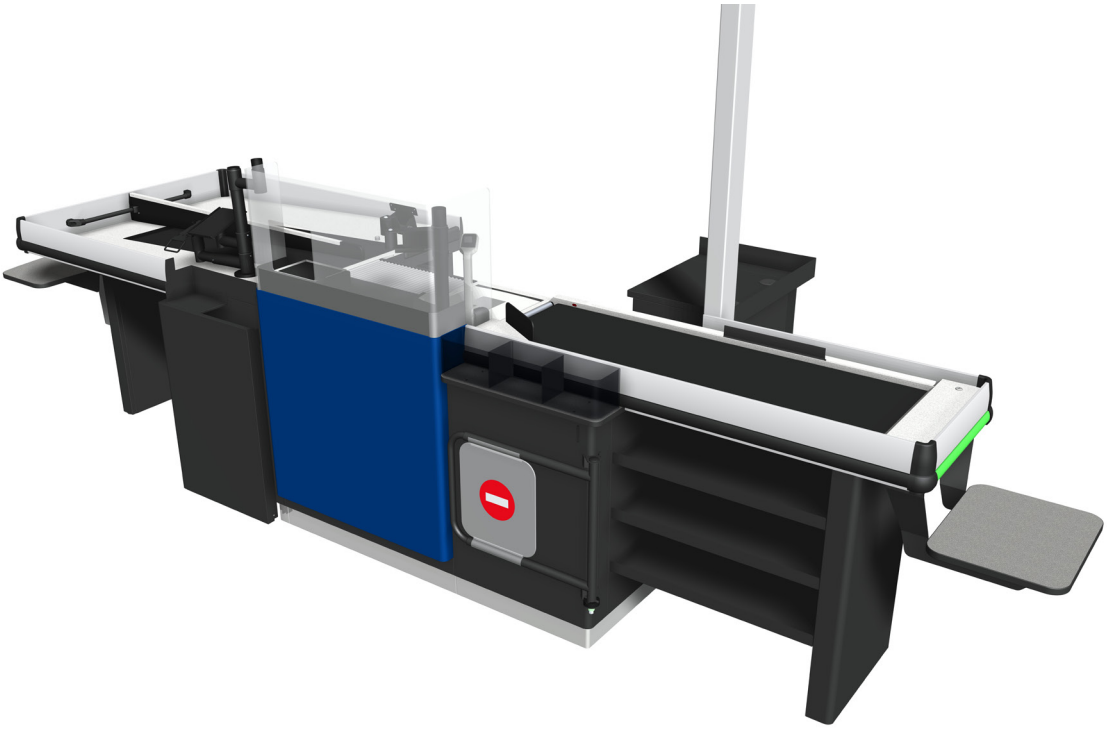

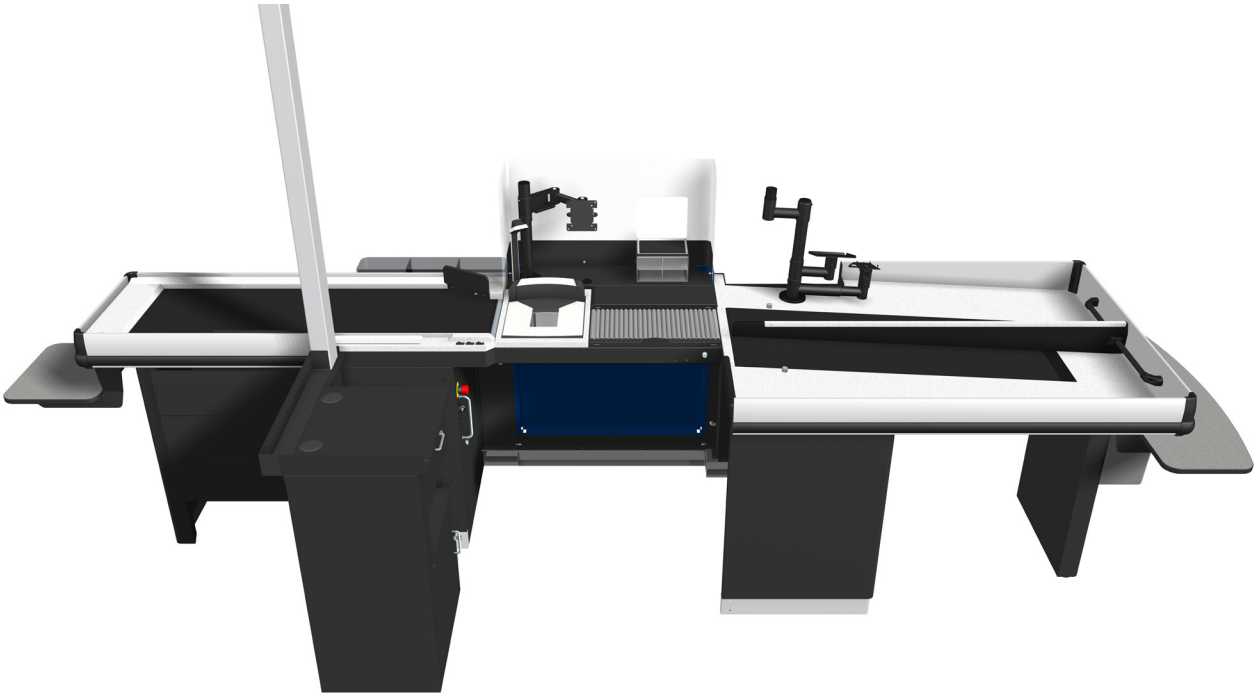

Linear **with 3rd customer solution**

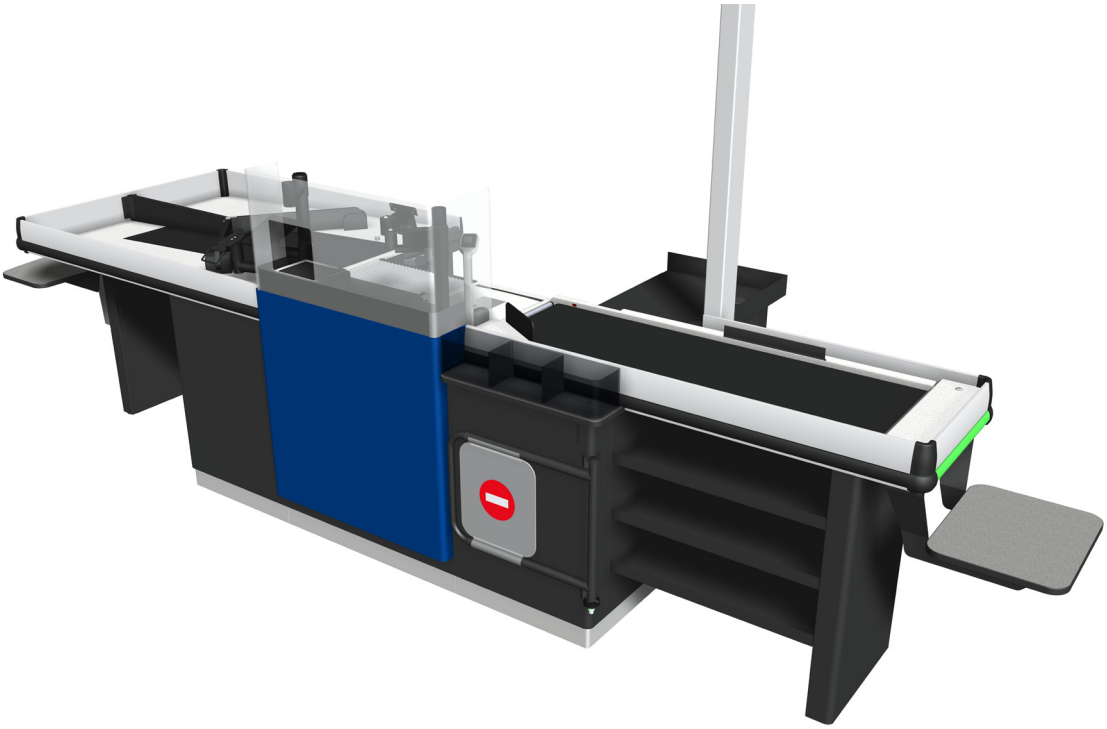

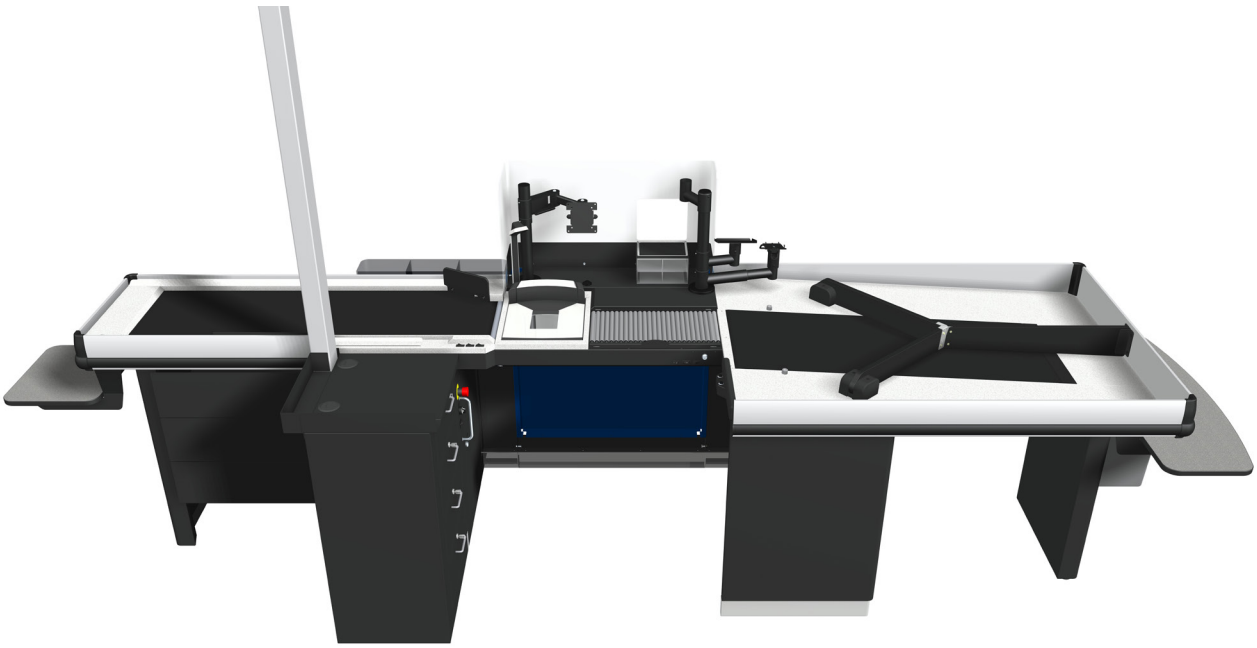

Scan the QR code to visit our website, where you can learn more about our offering.

Oy Checkmark Ltd
Hallipussi 5
761 00 Pieksämäki
FINLAND

Contact
Tel: +358 20 123 0700
Mail: checkmark@checkmark.fi
Website: www.checkmark.fi